PL1803V Owner's Manual



PL1803V & PL1803VR Owner's Manual

Original Instructions

IMPORTANT- READ CAREFULLY BEFORE USE AND KEEP FOR FUTURE REFERENCE

Table of Contents

Specifications 3

Intended Use 3

Labels 4

Throttle Controls 5

Packing Checklist 5

Initial Set-Up Assembly 6

Operation 6-7

Maintenance 7-17

Troubleshooting 18

Spare Parts List 19

Warranty Information 19

Part Illustrations and Lists 20-33

Specifications

	PL1803V & PL1803VR
Engine:	B&S VANGUARD 5.0 HP
Engine Model No.	10V3320003F1
Engine Fuel Capacity	3.3 qt. (3.1 L)
Engine Oil Capacity	0.63 qt. (0.6 L)
Total Unit Weight	242 lb (109.8 kg)
Length	57” (1.45 m)
Width	24”(.61 m)
Height	40” (1 m)
Maximum Operating Slope	15°

Intended Use

AERATOR

This machine is designed for aerating established lawns and large grass covered areas. The machine should not be used for any other purpose than that stated above.

DO NOT OPERATE IF EXCESSIVE VIBRATION OCCURS!

If excessive vibration occurs, shut engine off immediately and check for damaged or worn reel, loose reel bearing, loose engine or lodged debris. To remove debris from the machine, see the machine specific trouble shooting section. Note: See parts list for proper bolt torque specifications.

HANDLING & TRANSPORTING

Always use two or more people to lift these machines. Lift holding on either side of the machine, using the handles and the frame. Secure in place during transportation. See specifications for unit weight.


For safety, use gloves when lifting.

Never lift any machine while the engine is running.

Warning Labels

The labels shown below were installed on your BILLY GOAT® Aerator. If any labels are damaged or missing, replace them before operating this equipment. Item numbers from the Illustrated Parts List and part numbers are provided for convenience in ordering replacement labels. The correct position for each label may be determined by referring to the Figure and Item numbers shown.



Fig. 1
DANGER KEEP HANDS AND FEET AWAY
P/N 440424



Fig. 2
LABEL PINCH POINT PLP/N 100355



Fig. 3
DECAL, WARNING, HAND IN BELT, ENG. ONLY P/N 5103184



Fig. 4
LABEL AERATING INST PL

Instruction Labels



Fig. 5
LABEL TINE ENGAGE PL

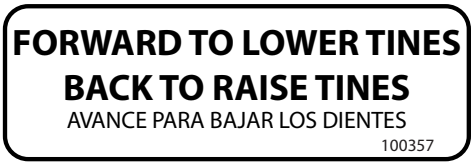

Fig. 6
LABEL LOWER TINES PL

Throttle Controls- Vanguard

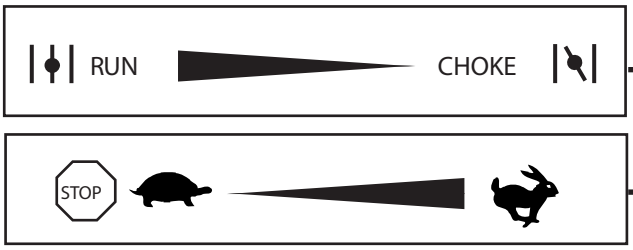

Set lever to choke when starting cold.

Set lever to dictate engine speed. To stop the engine, move the lever completely to the left.

Packing Checklist

Your Billy Goat aerator is shipped from the factory in one carton, completely assembled with the cables detached.

READ all safety instructions before assembling unit.
TAKE CAUTION when removing the unit from its box or crate.

PUT OIL IN ENGINE BEFORE STARTING.

Boxing Parts Checklist
☐ Operator's Manual (381508)
☐ Engine Manual (Briggs and Stratton)

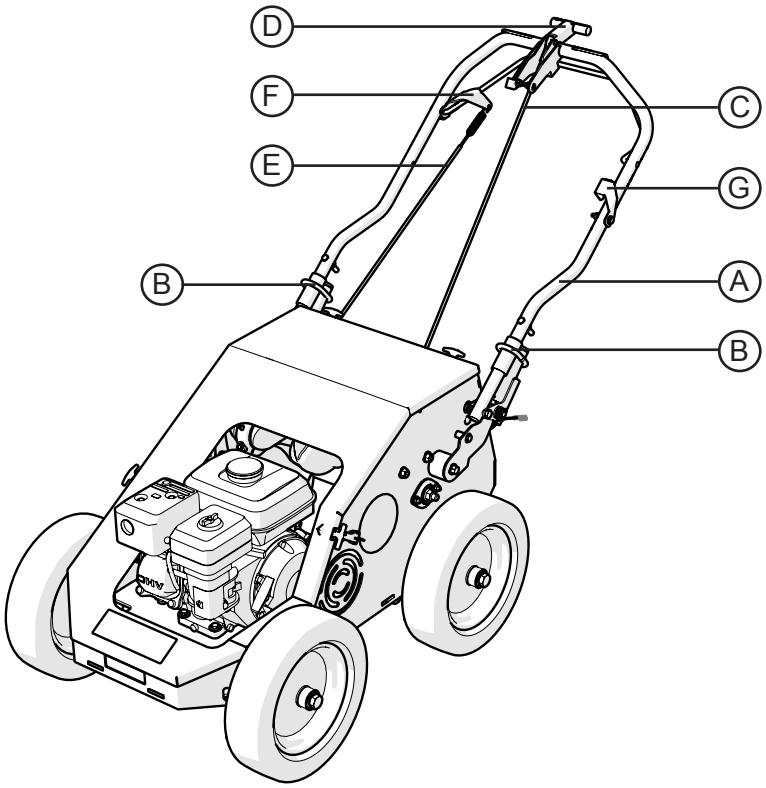

Figure A

Initial Set-Up Assembly

Refer to Figure X in the Packing Checklist section to identify parts in Initial Set-Up Assembly.

1. **UNFOLD** the upper handle (A, Figure A) and slide handle lock loops (B, Figure A) into place to secure the upper handle to the lower.

2. **ATTACH** the tine lift cable (C, Figure A) to the tine lever (D, Figure A) in the center of the handle by inserting the pin into it. Then attach the bail cable (E, Figure A) to the bail (F, Figure A). Check to make sure the cables are functioning properly before operation and not binding.

3. **CHECK** engine oil level and fill to proper level. Also check oil in gear reduction reservoir and fill if necessary. See engine owner's manual for type and amount of oil to use.

4. **CONNECT** spark plug wire. Set the engine stop switch (G, Figure A) to the ON position.

Operation

STARTING THE ENGINE

See engine manufacturer's instructions for type and amount of oil and gasoline used. Engine must be level when checking and filling oil and gasoline.

ENGINE SPEED: Controlled by lever on the engine. Under normal conditions, operate at the minimum throttle speed to accomplish your task.

ON/OFF: Set the on/off switch to ON

FUEL VALVE: Move fuel valve to "ON" position.

CHOKE: Engage the choke when starting a cold engine.

THROTTLE: Move the throttle control lever on the engine to fast position. Pull starting rope to start engine. **If your unit fails to start, check trouble shooting section in operator's manual and also see engine manual.**

AERATING OPERATION

Note: Never park this unit on a slope of any kind. Always keep tines in the up position when parking the unit.

TINES RAISING/LOWERING: The tines are raised or lowered into the ground by operating the tine engagement lever on the upper handle. Tine penetration is very dependent on surface preparation. READ the entire operation section before aerating.

ENGAGE TINES: With the aerator in the work area, lower the tines by releasing the center lever on the handle. When the lever is in the forward position, pull up on the bail to engage the tines.

AERATE: Push the machine with the tines engaged. NOTE: In cold temperatures engage the tines in the up position for two minutes to warm the cam grease. For maximum tine penetration apply downward pressure on the handle.

Operation

TURNING: At the end of an aerating run, release the bail and raise the tines out of the ground. Then reposition the unit for another pass and lower the tines to begin another run.

TRANSPORT: Be sure to raise tines out of the ground (disengaging the bail and then raising the tines with the center lever) before transporting away from the work area.

TIPS

MOW: Mow the lawn to its normal cut height.

WATER: For the best performance and maximum tine penetration the lawn should be thoroughly watered the day before aeration.

INSPECT: Check the lawn before beginning work. Remove all rocks, wire, string, or other objects that can present a hazard during work prior to starting.

IDENTIFY: Mark all fixed objects to be avoided during work, such as sprinkler heads, water valves, buried cables, or clothes line anchors, etc.

SLOPES: Do not operate the aerator on steep slopes (exceeding 15°). Use extreme caution when operating on any sloped surface. For lesser sloped areas operate the unit, traversing up and down at a 45° angle to the slope rather than straight across. Extended operation on steep slopes can cause engine damage.

Maintenance

PERIODIC MAINTENANCE

Periodic maintenance should be performed at the following intervals:

Maintenance Operation	Every Use	Every 10 Hrs	Every 50 Hrs	Every 100 Hrs
Inspect for loose, worn or damaged parts	•			
Check engine oil*	•			
Clean debris from unit and tines	•			
Grease cam bearings		•		
Inspect belt for wear			•	
Replace tine bushings				•
Grease shaft bearings				•

*Engine must be level when checking or filling oil. Refer to your Briggs and Stratton engine manual for proper engine maintenance procedures.

Maintenance

COMMON MAINTENANCE PROCEDURES

Note: Refer to *Figure B* for tools needed for common maintenance procedures outlined in this section.



Figure B

Letter Identification	Tool
A	Impact Wrench
B	1/2” socket
C	9/16” socket
D	1/2” wrench
E	9/16” wrench
F	1/8” Allen wrench
G	1/4” curved Allen wrench
H	Pliers

Maintenance

ADJUSTING BELT TENSION

1. Loosen the mounting bolts for the engine and then slide it to apply or relieve tension on the belt.

Note: Sliding the engine forward (away from the operator) increases belt tension. Sliding the engine rearward (towards the operator) relieves tension. Check and adjust belt tension after the first 10 hours of use.

REPLACING THE DRIVE BELT

1. Lower the tines on the PL1803 unit and remove its hood. Use your hands to pull down on the rubber latches (4 latches total; 2 in the rear of machine, 1 on each side of machine). See *Figure C* for latched position and *Figure D* for unlatched position.



Figure C



Figure D

2. Locate the wave spring attached to the tineshaft and inner pillow block bearing. See Figure E. Loosen the set screws with an 1/8” Allen wrench. Compress the wave spring by pressing against the end plate on the tinshaft. Once the wave spring is compressed, re-tighten the set screws. This will allow you to more easily move the tineshaft to remove the old or worn drive belt. See Figure F.

Note: If set-screws are missing, use a 0.250”-28 sized bolt.



Figure E

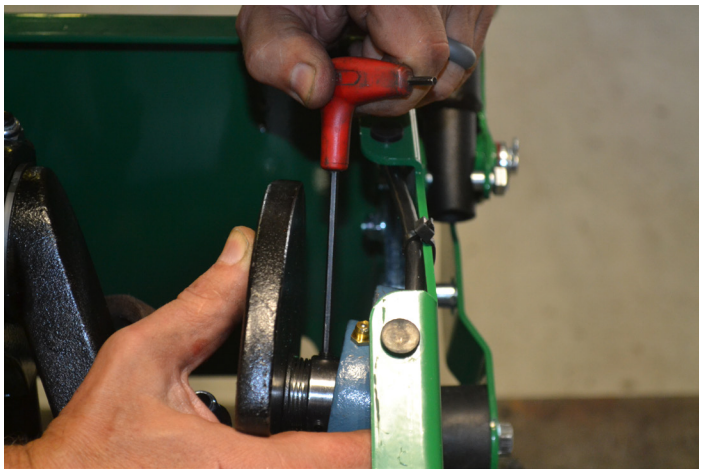

Figure F

3. Loosen the inner pillow block bearings on each side of the tineshaft. Simultaneously, use the impact wrench fitted with the 9/16” socket and the 9/16” wrench to remove the hardware from each pillow block bearing. See Figures G-J. Note the heavy weight of the tineshaft.



Figure G



Figure H



Figure I

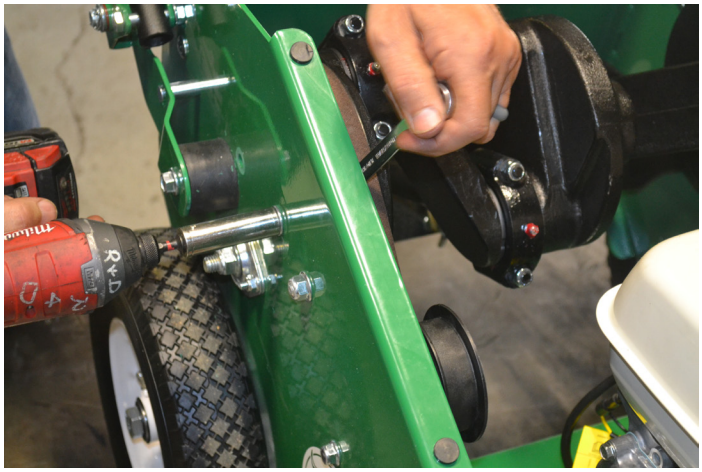

Figure J

4. Use the 1/4” curved Allen wrench to remove the top belt-guide-bolt. Do not remove the bottom belt-guide-bolt. See Figure K. Note how the belt is positioned around the pulleys in the machine.

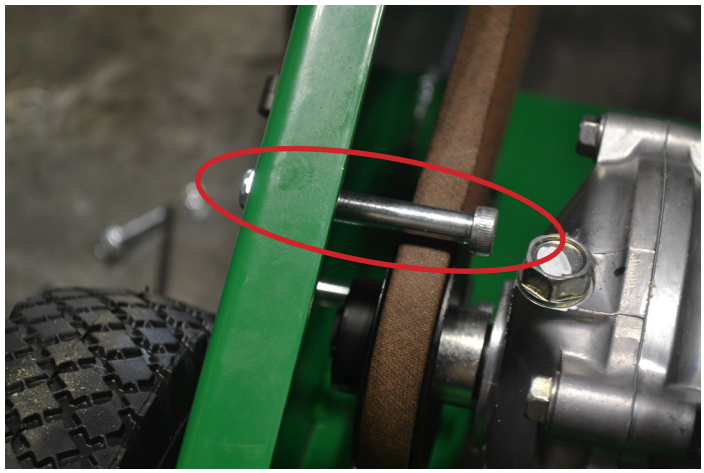

Figure K

5. Remove the broken or worn belt. Lift the tineshaft to manuever the belt out compeltely. See Figure L.

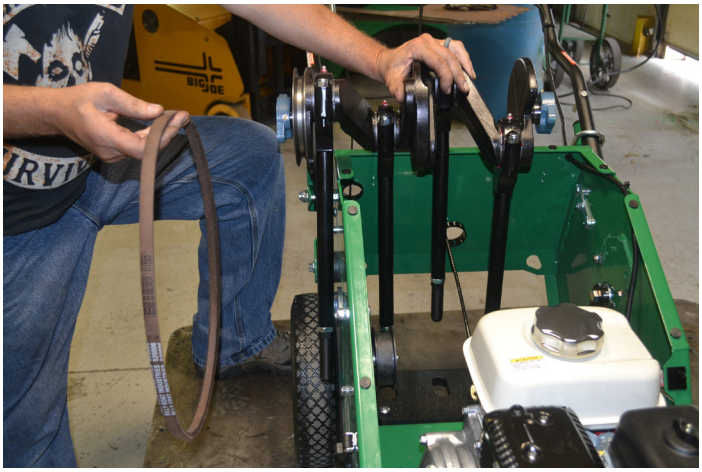

Figure L

6. Wrap the new belt around the drive pulley on the tineshaft and re-install the tineshaft into the machine. See Figure M. Ensure that the new belt is positioned around the pulleys correctly. See Figures N and O.

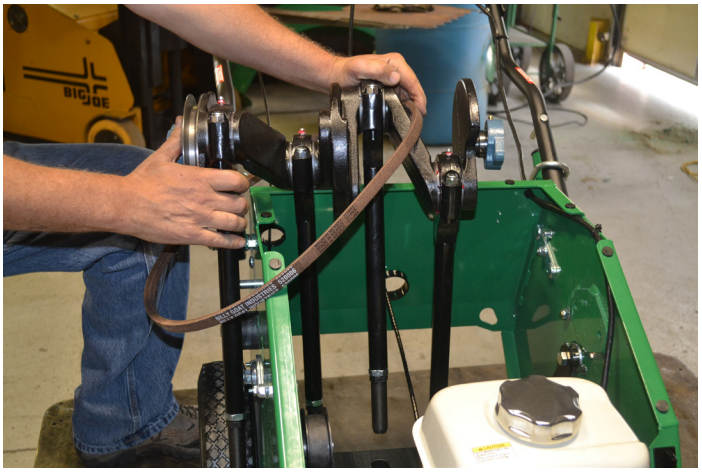

Figure M



Figure N

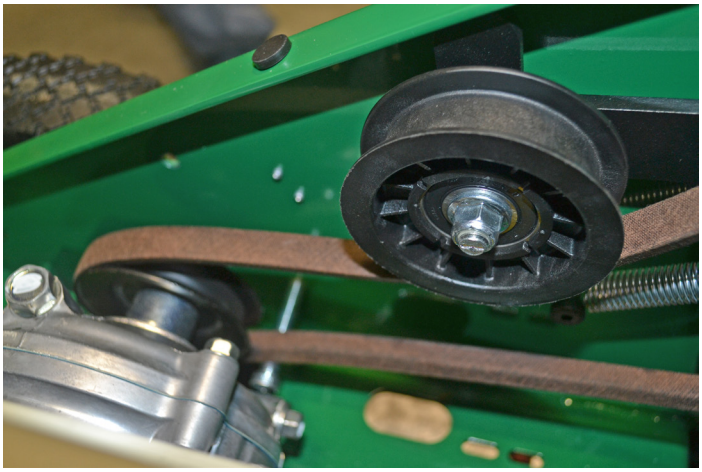

Figure O

6. Reverse steps 1-4 to reattach the top belt-guide-bolt, tineshaft, and hood.

REPLACING THE CLUTCH CABLE

1. Remove the hood of the PL1803 machine. Refer to Step 1 from the “REPLACING THE DRIVE BELT” section.

2. Remove the clutch idler pivot bolt. Simultaneously use the 1/4” curved Allen wrench with the impact wrench fitted with a 9/6” socket. See Figures P and Q.



Figure P



Figure Q

3. Detach the broken or worn cable from the idler bracket. Use pliers to remove the rue ring from the clevis pin holding the cable in place. Slide the cable off the clevis pin. Do not discard the clevis pin or rue ring. You will need these to attach the new cable. See Figures R and S.

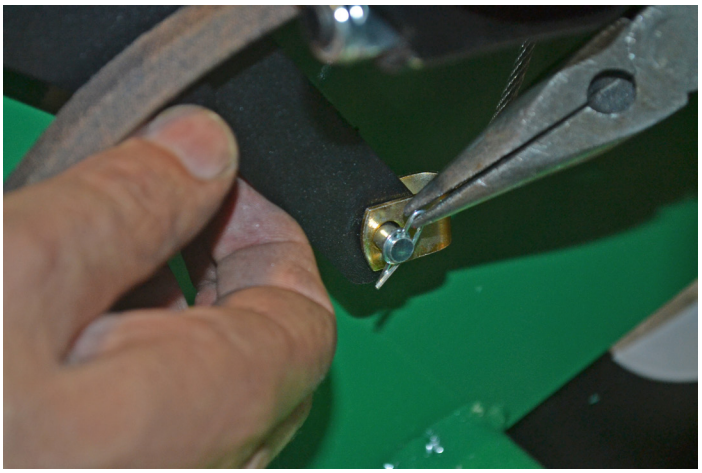

Figure R

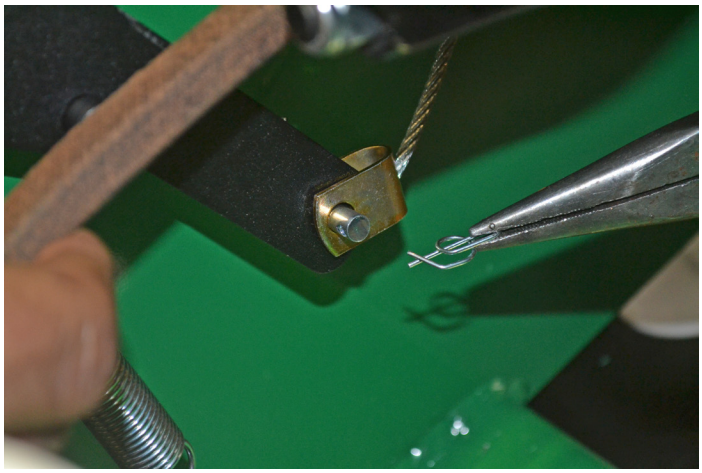

Figure S

4. Slide the clutch cable out of the machine through the back and unhook the cable from the bail. See Figures T and U.

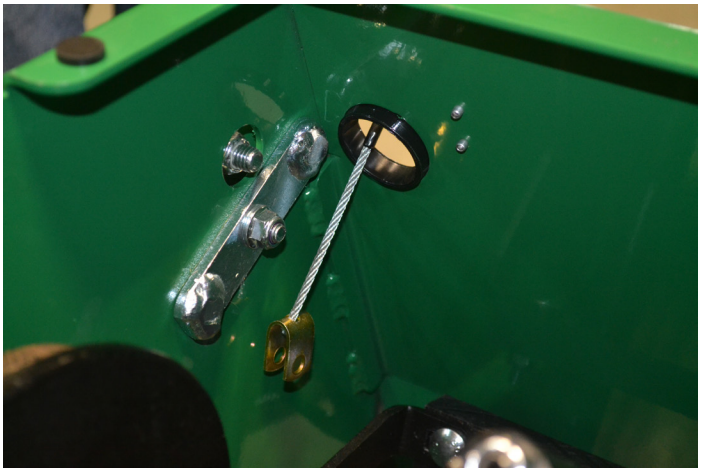

Figure T



Figure U

5. Attach the new cable to the bail and route the cable through the back of the machine. Reverse step 3 to attach and secure the new cable to the idler bracket. Reverse step 2 to secure the idler bracket to the machine. Engage the cable to ensure proper function then put the hood back onto your PL1803 unit.

REPLACING ISO MOUNT BUSHINGS

1. Remove the hood of the PL1803 machine. Refer to Step 1 from the “REPLACING THE DRIVE BELT” section.

2. Move the chain link handle lock up for better maneuverability. See Figure V.



Figure V

3. Use the impact wrench fitted with the 9/16” socket simultaneously with the 9/16” wrench to remove the handle bolt. Do not discard the handle bolt. See Figures W and X.



Figure W



Figure X

4. Use pliers to remove the rue ring and accompanying washer from the handle clevis pin. Set these items aside to attach later. See Figures Y and Z.



Figure Y



Figure Z

5. Use the impact wrench fitted with the 9/16” socket to remove the outside mount bolt and inside nut. Do not discard. See Figure AA.



Figure AA

6. Pull out the handle isolation bracket and remove the old ISO mount bushing. See Figures AB and AC.



Figure AB



Figure AC

7. Install the new ISO mount bushing and ensure the stud faces the inside of the machine. Reverse step 5 to secure the new bushing. Do not overtighten!

8. Reverse steps 4, 3, and 2 to secure the handle.

9. Repeat the entire procedure on the opposite side of the machine to replace both ISO mount bushings.

REPLACING INDIVIDUAL TINES

1. Wait for engine to cool and disconnect spark plug.
2. Loosen the jam nut then unscrew the tine.
3. Replace the tine making sure to use the maximum amount of threads on the tine.

Note: Tines are a normal wear item and should be inspected regularly for signs of wear or damage.

REPLACING THE TINE PLATE

1. Lower the tines.

2. Use the impact wrench fitted with a 1/2” socket to remove the 5/16” carriage bolts from the four corners of the tine plate. This will detach the plate from the tine arms. See Figures AD and AE.



Figure AD



Figure AE

3. Unhook the engagement cable. See Figure AF. Slowly wiggle the plate out from the tines. See Figure AG.

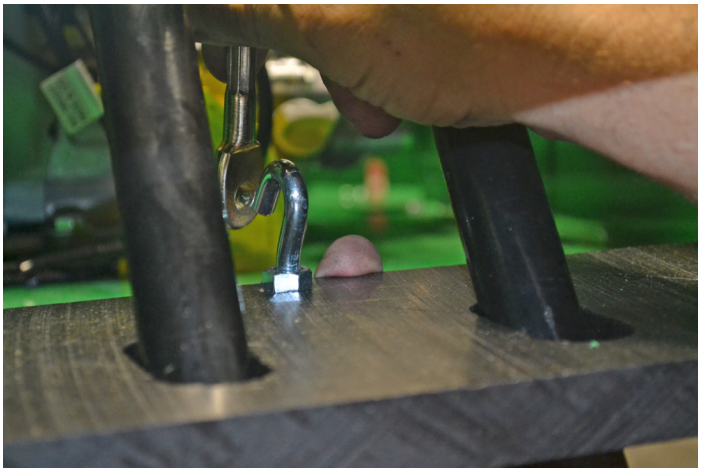

Figure AF

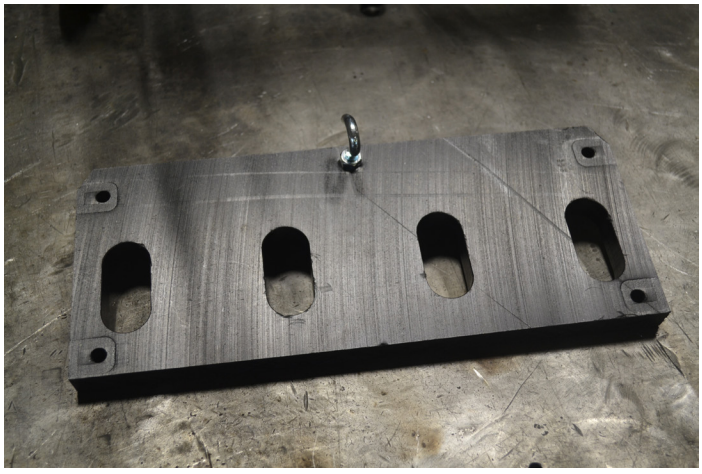

Figure AG

4. Remove the anchor from the old plate. See the part to remove circled in Figure AH. Hold the anchor in place with pliers and simultaneously use a 1/2” wrench to detach the bottom nut. Attach the anchor to the new plate.

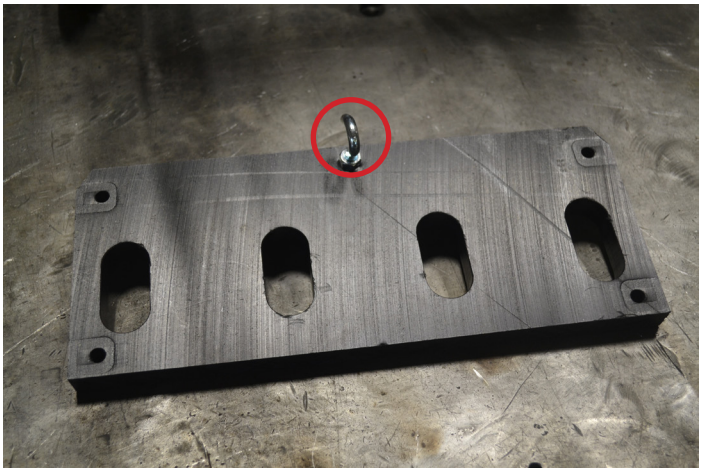

Figure AG

5. Attach the new plate. Slowly feed the new plate onto the tines. Note the position of the plate. The plate edge closest to the tine holes should face the operator. See Figure AI.



Figure AI

6. Reverse step 3 to secure the new plate to the engagement cable. Reverse step 2 to secure the new plate to the tine arms.

Troubleshooting

Problem	Possible Cause of Problem	Possible Solution to Problem
Engine will not start.	• Stop switch is in OFF position. • Throttle is in OFF position. • Engine is not in full choke position. • No gasoline in engine. • Gasoline in engine has expired. • Oil level in engine is too low. • Air filter is dirty.	• Check stop switch, throttle, and choke positions. • Check engine's gasoline level and quality. • Check engine's oil level and quality. • Clean or replace air filer. • Contact a qualified engine servicer.
Machine vibrates abnormally.	• Tines are damaged or missing. • Handle bolts are loosened. • Engine bolts are loosened.	• Stop work immediately! • Replace damaged or missing tines. • Tighten all loose nuts and bolts.
Engine stalls or labors when aerating.	• Slope is too steep for operation. • Engine oil level is too low.	• Work at a 45° angle to the slope. • Work up and down the slope, not across. • Check engine oil level and add oil when appropriate.
Engine is locked and will not pull over.	• Debris is locked against drive pulleys. • Engine is malfunctioning.	• Pull spark plug wire. • Remove debris from drive pulleys. • Contact a qualified engine servicer.
Machine does not move when the clutch is engaged.	• Drive belt is out of adjustment. • Drive belt is worn. • Pulleys are loose or damaged. • Clutch cable is damaged or broken.	• Refer to subsection "Replacing the Drive Belt" in the Maintenance section of this manual to perform the belt replacement properly. • Contact a qualified engine servicer.

Spare Parts List

Please refer to this list of spare parts you may need to service your BILLY GOAT® Aerator. You can order these parts through our customer service team. Please refer to our website at www.billygoat.com.

Part	Part Number	Application
Tines	382244	Aerator Tine Assembly
Tine Plate	382325	Aerator Tine Assembly
ISO Mount Bushings	373257	Handlebar Assembly
Clutch Cable	380221	Controls
Drive Belt	520006	Drive Belt
Wheels	381768	Wheel and Tire

Warranty Information

When servicing engine refer to specific manufacturer's engine owner's manual. Engine warranty is covered by the engine manufacturer. If your engine requires warranty or other repair work contact your local servicing engine dealer. When contacting a dealer for service it is a good idea to have your engine model number available for reference (Refer to the Specifications section of this manual). If you cannot locate a servicing dealer in your area you can contact the manufacturer's national service organization.

Briggs and Stratton: 414-479-8008

WARRANTY CLAIM PROCEDURE

Should a BILLY GOAT ® machine fail due to a defect in material and/or workmanship, the owner should make a warranty claim as follows:

- The machine must be taken to the dealer from whom it was purchased or to an authorized Servicing BILLY GOAT Dealer.
- The owner must present the remaining half of the Warranty Registration Card, or, if this is not available, the invoice or receipt.
- The Warranty Claim will be completed by the authorized BILLY GOAT Dealer and submitted to their respective BILLY GOAT Distributor for their territory Attention: Service Manager. Any parts replaced under warranty must be tagged and retained for 90 days. The model number and serial number of the unit must be stated in the Warranty Claim.
- The distributor service manager will sign off on the claim and submit it to BILLY GOAT for consideration.
- The Technical Service Department at BILLY GOAT will study the claim and may request parts to be returned for examination. BILLY GOAT will notify their conclusions to the distributor service manager from whom the claim was received.
- The decision by the Technical Service Department at BILLY GOAT to approve or reject a Warranty Claim is final and binding.

For online product registration go to www.billygoat.com

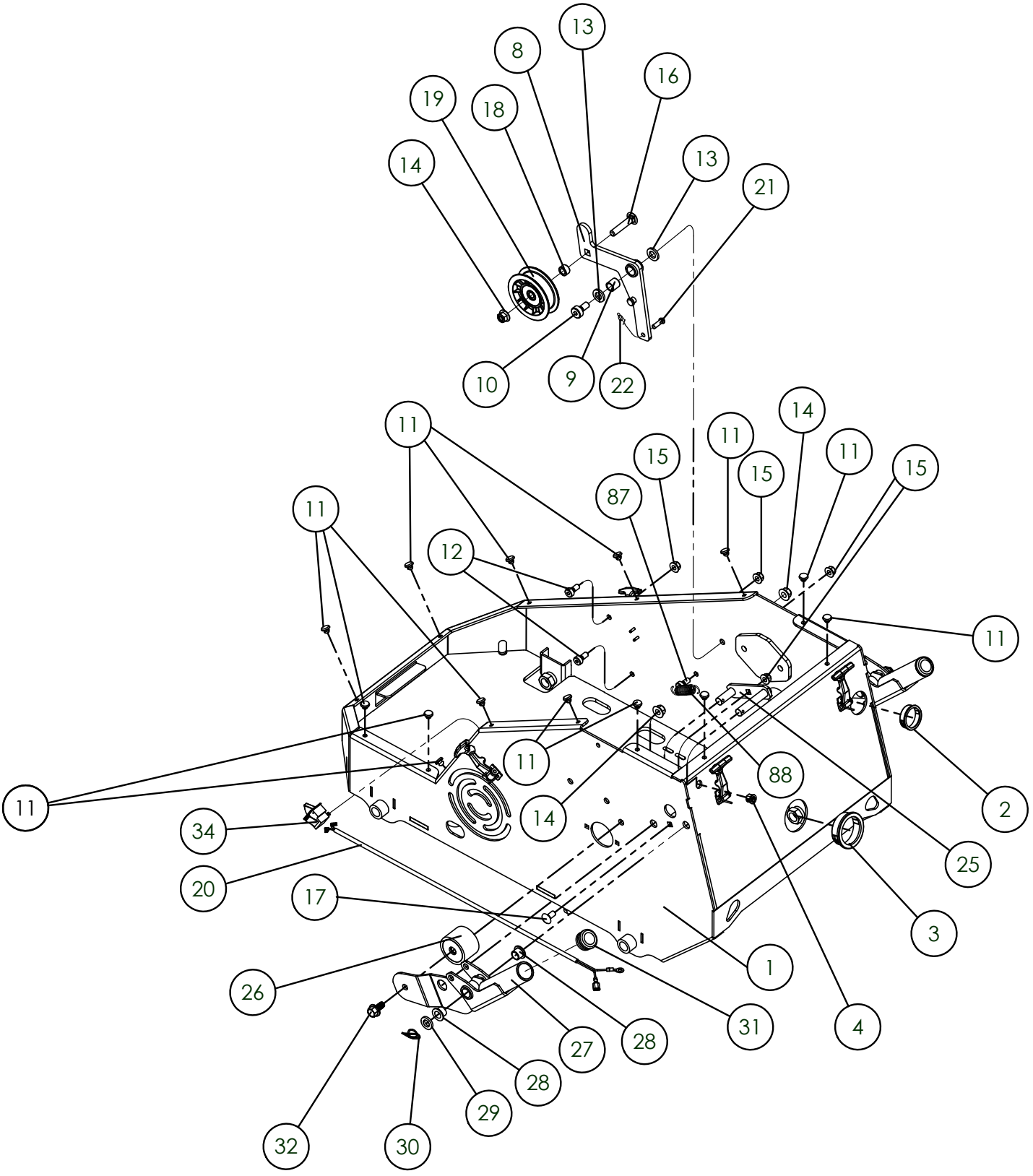
13
8
16
19
18
14
13
21
10
9
22
11
14
11
15
11
15
15
87
11
12
11
11
88
2
11
14
34
25
20
17
3
1
26
31
4
27
28
28
29
32
30

PL1803 Parts Illustrations and Lists

PL1803V

Item No.	Description	Part No.	QTY
1	WA, PL1801 FRAME	382130-S	1
2	BUSHING, SNAP 1.31” ID	382240	1
3	BUSHING, SNAP 1.81” ID	382292	1
4	BUSHING, SPLIT 0.350” NYLON BLACK	373308	1
8	WA, IDLER ARM PL18	382133	1
9	BRG, SLEEVE Ø.500” X Ø.625” X .625”	382312	1
10	BLT-SLDR,SH.500”X1.00”,.375”-16X.63”G-8ZP	382259	1
11	RUBBER BUMPER, PUSH-IN	380224	14
12	BLT-SLDR,SH.375”X2.25”,.313”-18X.50”G-8ZP	382322	2
13	WSHR-NYL, FLT, .500” X .875” X .125”	382258	2
14	NUT-HEX-NYLK, FLG .375”-16 ZP	8165003	4
15	NUT-HEX-NYLK, FLG .3125”-18 ZP	8165002	5
16	BOLT CARRIAGE 3/8-16 X 2” ZP	8024062	1
17	BOLT CARRIAGE 5/16-18 X 3/4” ZP	8024039	2
18	TUBE SPACER 0.625” OD x 0.357” LONG	440228	1
19	PULLEY IDLER 2.75” OD X 3/8” BORE	350114	1
20	WIRE HARNESS, PL HOOD SWITCH	380227	1
21	PIN, CLEVIS 1/4 x 3/4	381077	1
22	PIN, RUE RING 0.250”	371275	1
25	WA, ISO MOUNT	382134	2
26	ISOLATOR, VIBRATION HANDLE SC181H	373257	2
27	WA, REVOLVER LH	382136-S	1
28	BUSHING, .500” I.D.	362254	4
29	WSHR-STL,FLT .500”X.875”X.134” MAB ZP	382277	2
30	RING, RUE .500”	382336	2
31	PLUG TUBE INSERT 1.25” O.D.	791056	2
32	SER. HEX WSHR FLNG SCR 0.375 - 16 x 0.75	791080	2
34	SWITCH INTERLOCK	840058	1
87	BLT-SLDR,SH.375”X1.00”,.313”-18X.50”G-8ZP	360152	1
88	SPRING IDLER UPPER OS900SP	351275	1

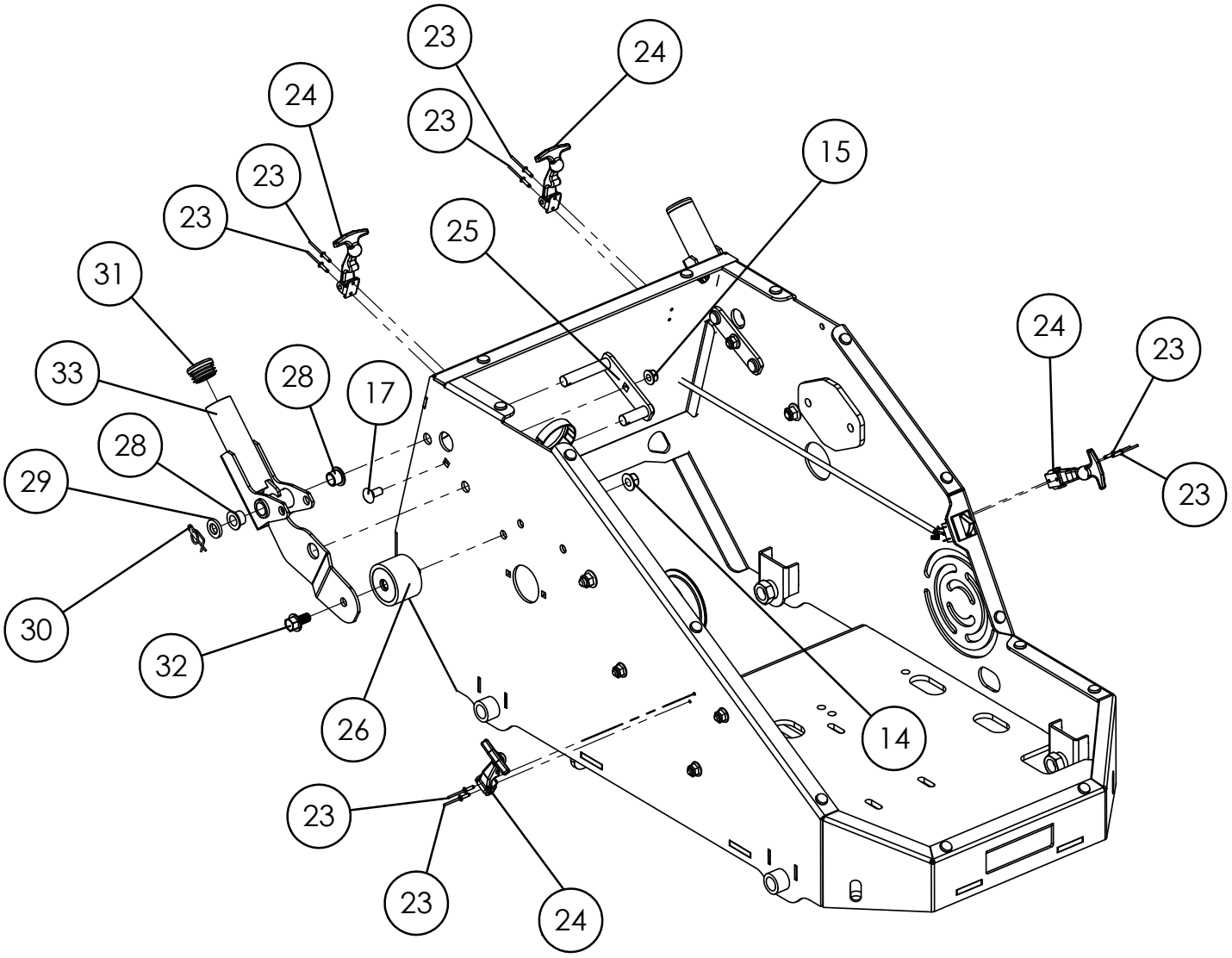
23
24
24
23
23
23
15
25
31
33
28
17
28
29
30
32
26
24
23
23
14
23
23
24

PL1803V

Item No.	Description	Part No.	QTY
14	NUT-HEX-NYLK, FLG .375”-16 ZP	8165003	1
15	NUT-HEX-NYLK, FLG .3125”-18 ZP	8165002	1
17	BOLT CARRIAGE 5/16-18 X 3/4” ZP	8024039	2
23	RIVET 1/8 x 1/4 ALUM	381115	8
24	RUBBER LATCH KIT	381003	4
25	WA, ISO MOUNT	382134	2
26	ISOLATOR, VIBRATION HANDLE SC181H	373257	2
28	BUSHING, .500” I.D.	362254	4
29	WSHR-STL,FLT .500”X.875”X.134” MAB ZP	382277	2
30	RING, RUE .500”	382336	2
31	PLUG TUBE INSERT 1.25” O.D.	791056	2
32	SER. HEX WSHR FLNG SCR 0.375 - 16 x 0.75	791080	2
33	WA, REVOLVER RH	382135-S	1

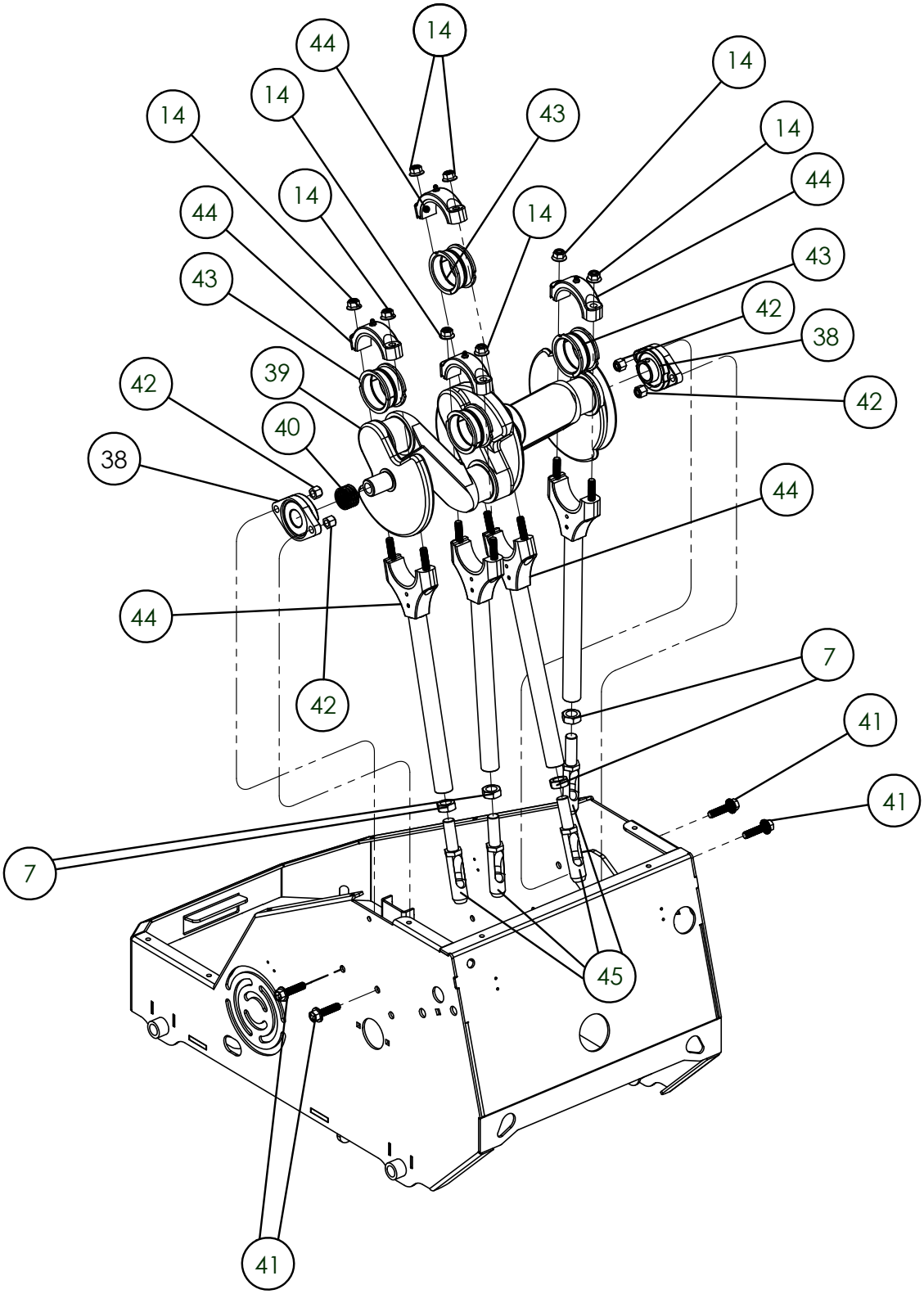
14
44
14
14
43
14
14
44
14
44
14
43
43
42
38
39
42
42
40
38
44
44
42
7
41
41
7
45
41

PL1803V

Item No.	Description	Part No.	QTY
7	JAM NUT, 5/8-11 UNC	8143007	4
14	NUT-HEX-NYLK, FLG .375”-16 ZP	8165003	6
38	BEARING FLANGED 1.0 DIA	381042	2
39	CRANK 4 TINE	381296	1
40	SPRING, WAVE 1.000” X .700”	382220	1
41	SCR-CAP, HSWH .375”-16 X 1.500” G5 ZP	382296	4
42	NUT LOCK 3/8-16 HEX	8160003	4
43	BEARING JOURNAL 2” DIA	380213	8
44	ASM, TINE ROD AND CAP	382264	4
45	TINE, PLUGR .625”-11 BLACK	382244	4

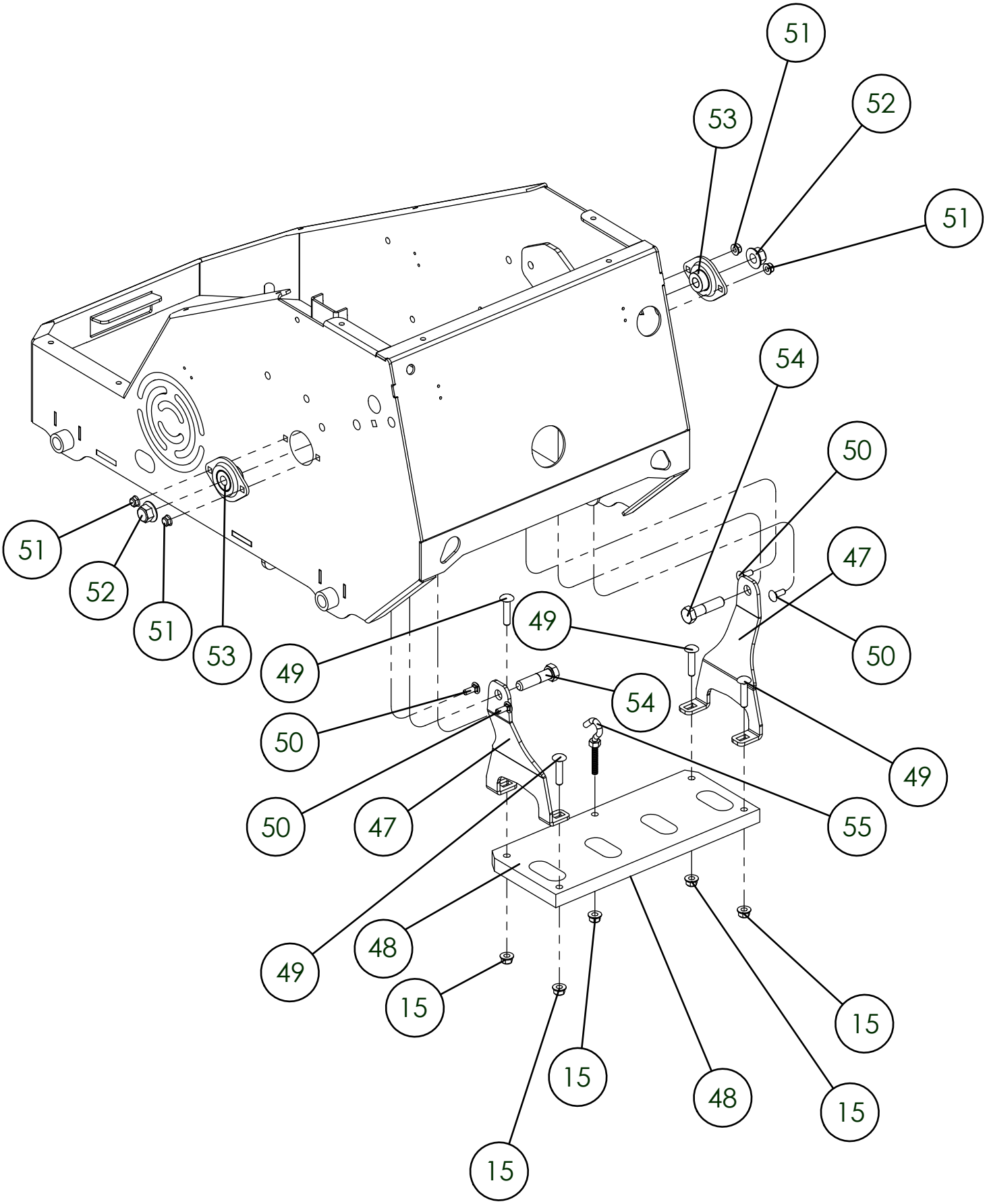
51
53
52
51
54
50
51
52
51
53
47
49
50
49
54
50
49
50
47
55
49
48
15
15
15
48
15
15

PL1803V

Item No.	Description	Part No.	QTY
15	NUT-HEX-NYLK, FLG .3125”-18 ZP	8165002	5
47	BRKT, RETRACTOR PLATE	382326	2
48	PLATE, RETRACTOR PL1801	382325	1
49	BLT-RDHDSSQNK, .3125”-18 X 1.500” G5 ZP	8024068	4
50	BOLT CARRIAGE 1/4-20 X 3/4” ZP	8024021	4
51	NUT-HEX-NYLK, FLG .250”-20 ZP	8165001	4
52	NUT-HEX-NYLK, FLG .500”-13 ZP	8165005	2
53	BEARING 1/2” PRESSED STEEL HOUSING	891025	2
54	SCREWCAP 1/2-13 X 2 GR5 ZP	8041098	2
55	BLT, HOOK .3125”-18 X 3.125” OAL W/NUT	382337	1

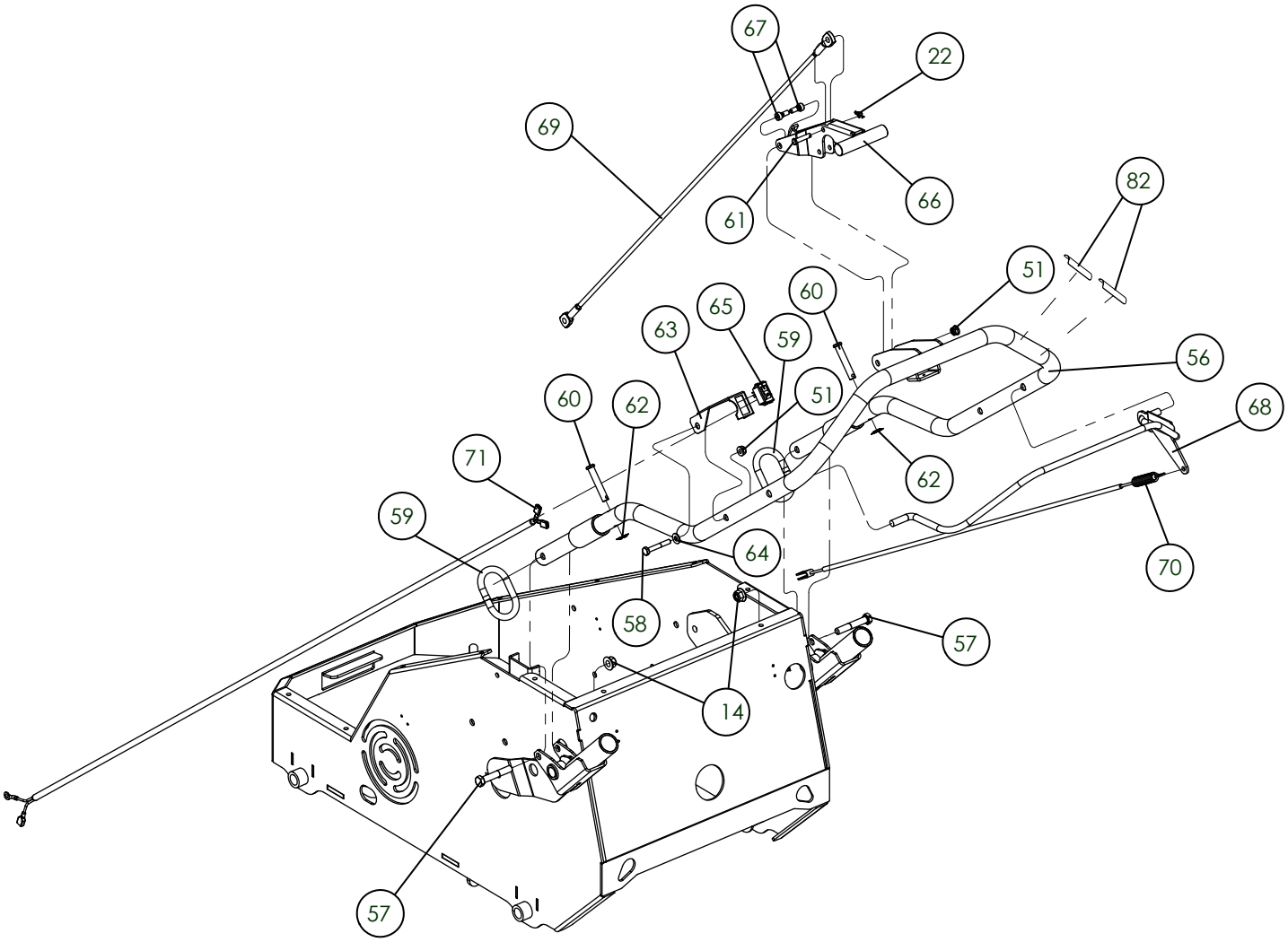
67
22
69
66
61
82
51
60
65
63
59
56
60
62
51
68
71
62
59
64
70
58
57
14
57

PL1803V

Item No.	Description	Part No.	QTY
14	NUT-HEX-NYLK, FLG .375”-16 ZP	8165003	2
22	PIN, RUE RING 0.250”	371275	1
51	NUT-HEX-NYLK, FLG .250”-20 ZP	8165001	1
56	WA, HANDLE PL1801	382131	1
57	SCREWCAP 3/8”-16 X 2 1/4” HCS ZP GR 5	8041055	2
58	SCREWCAP 1/4”-20 X 1 3/4” HCS ZP	8041009	1
59	LOOP FOLDING HANDLE OS900SP	351231	2
60	PIN CLEVIS 3/8 x 2.125	520120	2
61	PIN, CLEVIS ¼ X 1-1/8 ZP	381345	1
62	RETAINER 3/8” BOLT PUSH NUT	360279	2
63	QB SWITCH BOX	430141	1
64	WASHER 1/4 SAE 9/32 X 5/8 X 1/16	8172007	1
65	SWITCH LKG RKR B&S #493521	500281	1
66	HANDLE RETRACTOR WA	381201	1
67	BLT-SLDR,SH.313”X.25”,.25”-20X.438”G8ZP	381158	2
68	WA, BAIL PL1801	382132	1
69	TINE LIFT CABLE, PL1801	382332	1
70	CABLE CLUTCH 39”	380221	1
71	HARNESS WIRE 60”	360316	1
82	LABEL TINE ENGAGE PL	100356	2

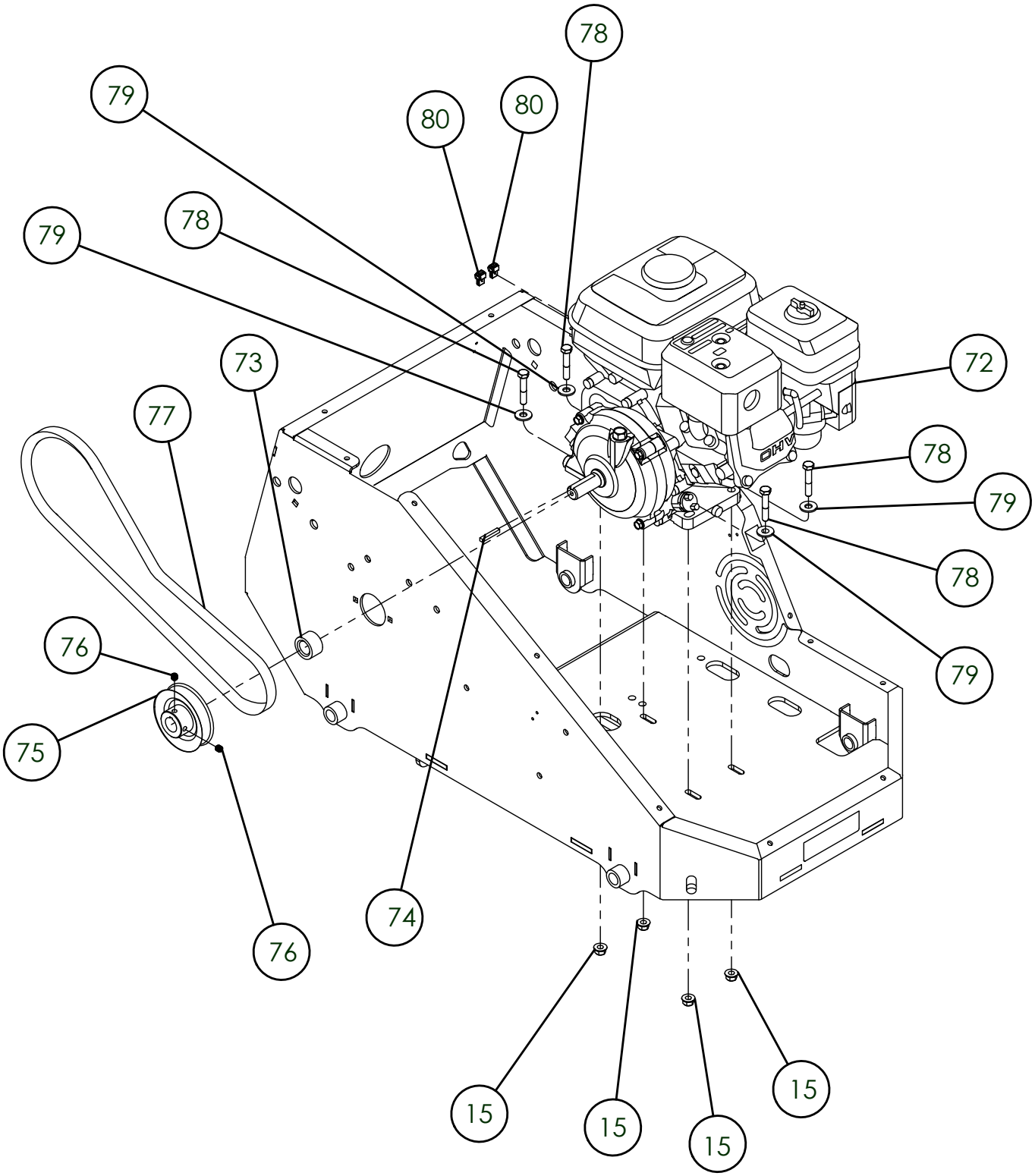
78
79
80
80
78
79
73
72
77
78
79
78
79
76
75
74
76
15
15
15
15

PL1803V Parts Illustrations and Lists

PL1803V

Item No.	Description	Part No.	QTY
15	NUT-HEX-NYLK, FLG .3125”-18 ZP	8165002	15
72	ENGINE, VANGUARD 203CC W/6:1 AT 3	382323	1
73	SPCR; ENG SHAFT VAN PL18	381215	1
74	KEY 3/16” SQ X 1 1/4”	9201080	1
75	PULLEY, 3.50” O.D. x 0.750” I.D. V, A/B	5105968	1
76	SCREW SET 5/16-18 X 5/16”	8084106	2
77	BELT BLADE DRIVE 5L45 (PBL)	520006	1
78	SCREWCAP 5/16”-18 X 1 3/4” GR 5 HCS ZP	8041031	4
79	WASHER 5/16 FLAT ZP	8171003	4
80	TERMINAL 18-14 BLUE T-TAP	840215	2

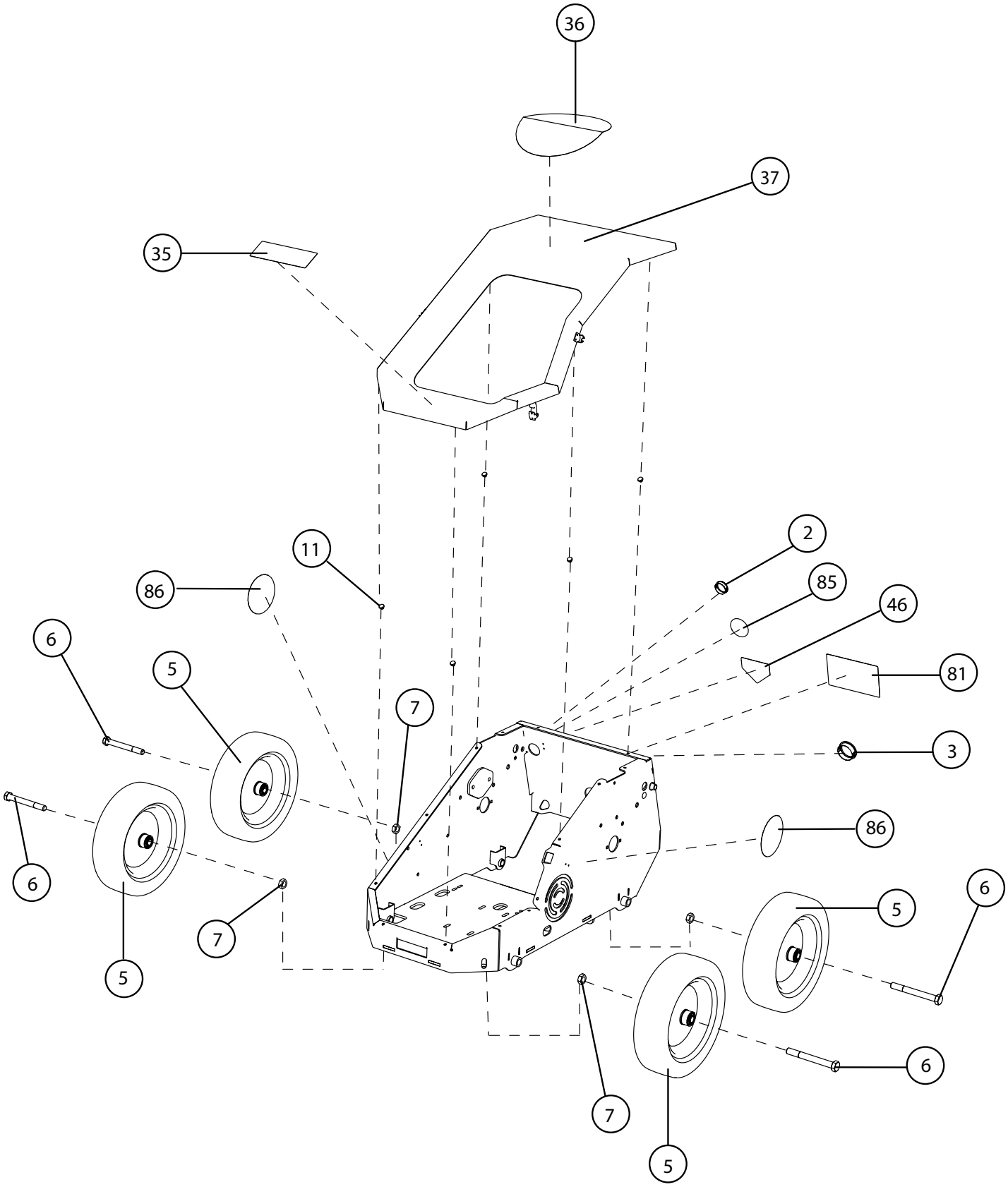
36
37
35
2
11
85
86
46
6
5
81
7
3
86
6
5
6
7
5
7
6
7
5

PL1803V Parts Illustrations and Lists

PL1803V

Item No.	Description	Part No.	QTY
2	BUSHING, SNAP 1.31” ID	382240	1
3	BUSHING, SNAP 1.81” ID	382292	1
5	ASM,WHEEL&TIRE HDPU 12"X3" W/ BRG&SPANNER	381781	4
6	SCR-CAP, HEX .625”-11 X 5.500” G5 ZP	8041153	4
7	NUT JAM, 5/8-11 ZP	8143007	4
11	RUBBER BUMPER, PUSH-IN	380224	14
35	LABEL BADGING PLUGR PL415	100367	1
36	LABEL BADGING 10” LOGO ROUND	100365	1
37	WA, PL18 COVER W/DECALS	382350-S	1
46	LABEL WARNING OPEI	400424	1
81	LABEL AERATING INST PL	100354	1
85	LABEL ROUND CORE T2V 2.5”	380239	1
86	LABEL PRODUCT DECAL SM CIRCLE	890456	2

MODEL#	POSITION#	OPERATION/PROCESS NAME
PL1803VR	6	PL1803VR REDEXIM DECALS INSTALL

PROCESS INSTRUCTIONS

1. Install labels as shown. DO NOT use windex to install labels on textured paint!

ITEM	PART NUMBER	DESCRIPTION	QTY
21	100392	LABEL EASY CORE	1
22	100393	LABEL 104	1
23	100396	LABEL REDEXIM	2
24	100397	LABEL GENERAL WARNING	2
25	100398	LABEL READ MANUAL	1
26	100399	LABEL HEARING PROTECTION	1
27	100356	LABEL TINE ENGAGE PL	2
28	100357	LABEL LOWER TINES PL	1
29	100443	LABEL, P65 WARNING - MACHINE	1
30	400628	LABEL INSPECTED BY	1

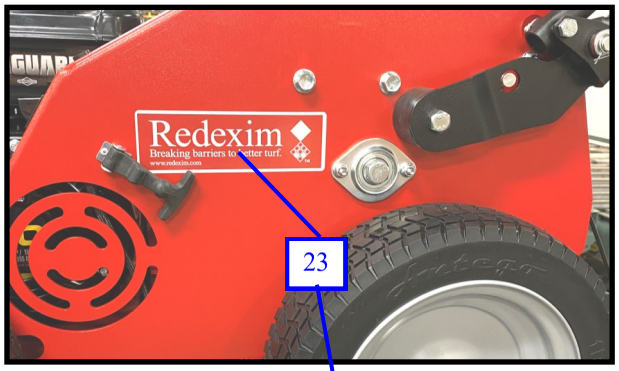

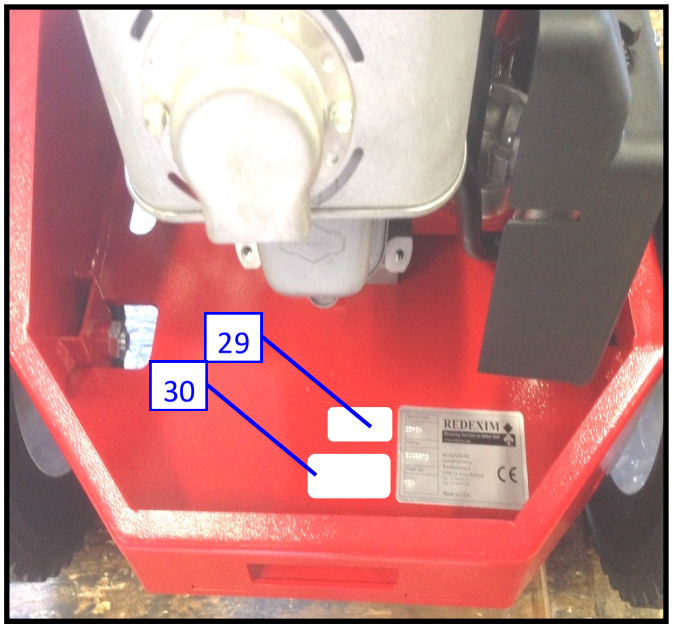





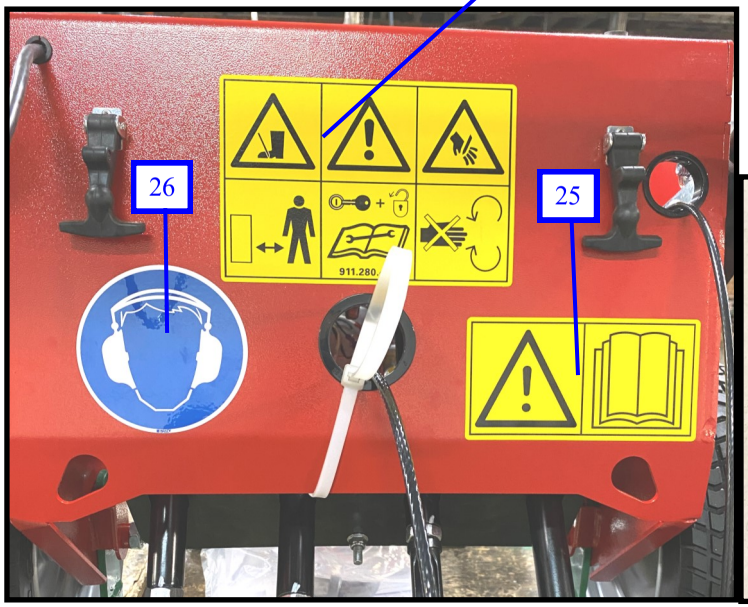

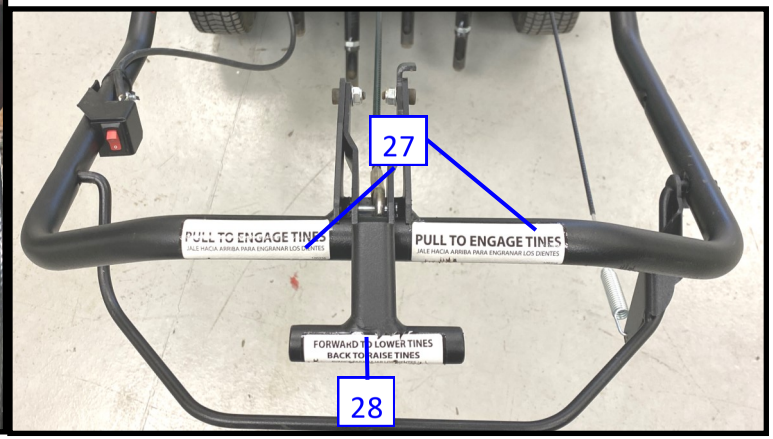

UK CA CE

en	English	et	eesti keel	lt	Lietuvių	ru	Русский
bg	български език	fi	Suomi	lv	Latviešu	sk	Slovák
cs	Čeština	fr	Français	nl	Nederlands	sl	Slovenščina
da	Dansk	hu	Magyar	no	Norsk	sv	Svenska
de	Deutsch	hr	Hrvatski	pl	Polski	tr	Türkçe
el	Ελληνικά	it	Italiano	pt	Português		
es	Español	lt	Lietuvių	ro	Română		

en	EU & UK Declaration of Conformity	fr	Déclaration de conformité pour l'UE et le Royaume-Uni	pt	Declaração de Conformidade da UE e do Reino Unido
bg	Декларация за съответствие на ЕС и на Обединеното кралство	hr	Izjava o sukladnosti za EU i UK	ro	Declarație de conformitate UE și Regatul Unit
cs	Prohlášení o shodě – EU a VB	hu	EU és Egyesült Királyság Megfelelőségi Nyilatkozat	ru	Заявление о соответствии стандартам и нормам ЕС и Великобритании
da	Overensstemmelseserklæring for EU og Storbritannien	it	Dichiarazione di conformità UE e Regno Unito	sk	Vyhlásenie o zhode pre EÚ a Spojené kráľovstvo
de	EU- und GB-Konformitätserklärung	lt	ES ir JK atitikties deklaracija	sl	Izjava o skladnosti za EU in ZK
el	Δήλωση Συμμόρφωσης ΕΕ & ΗΒ	lv	ES un AK Atbilstības deklarācija	sv	Försäkran om överensstämmelse för EU och Storbritannien
es	Declaración de conformidad de la UE y del Reino Unido	nl	Conformiteitsverklaring EU en VK	tr	AB ve İngiltere Uygunluk Beyanı
et	EL ja UK vastavusdeklaratsioon	no	Samsvarserklæring for EU og Storbritannia		
fi	EU- ja UK-vaatimustenmukaisuusvakuutus	pl	Deklaracja zgodności UE i Wielkiej Brytanii		

en	Description, Generic Denomination & Function Aerator	fr	Description, nom générique et fonction aérateur	pl	Opis, ogólne określenie i funkcja aerator
bg	Описание, общи наименования и функции аератор	hr	Opis, opća klasifikacija i funkcija aerator	pt	Descrição, denominação genérica e função aerador
cs	Popis, generická nominální hodnota a popis perlátor	hu	Leírás, általános megnevezés és funkció Áram	ro	Descriere, denumire generică și funcție aerator
da	Beskrivelse, generel benævnelse og funktion belufter	it	Descrizione, denominazione generica e funzione aeratore	ru	Описание, общее наименование и назначение аэратор
de	Beschreibung, allgemeine Bezeichnung und Funktion Belüfter	lt	Aprašas, bendrasis pavadinimas ir funkcijos aeratorius	sk	Popis, všeobecné označenie a funkcia perlátor
el	Περιγραφή, Γενική Ονομασία & Λειτουργία αεριστής	lv	Apraksts, vispārīgs nosaukums un funkcija aerators	sl	Opis, splošni naziv in funkcija aerator
es	Descripción, denominación genérica y función aireador	nl	Beschrijving, algemene benaming en functie beluchter	sv	Beskrivning, generisk beteckning och funktion luftare
et	Kirjeldus, üldnimetaja ja funktsioon õhusti	no	Beskrivelse, generisk betegnelse og funksjon aerator	tr	Tanım, Genel Adlandırma ve İşlev havalandırıcı
fi	Kuvaus, yleinen nimitys ja toiminta ilmastin				

en This declaration of conformity is issued under the sole responsibility of the manufacturer. This is to certify that the products listed in this document are in conformity with the relevant Union harmonization legislation and the relevant UK legislation, and can carry the CE and UKCA mark. These models comply with the following Directives, regulations and related Standards.

bg Настоящата декларация за съответствие е издадена на пълната отговорност на производителя. Целта ѝ е да удостовери, че посочените в този документ продукти са в съответствие с приложимото законодателство на Съюза за хармонизация и съответното законодателство на Обединеното кралство и могат да носят маркировката „CE“ и „UKCA“. Тези модели отговарят на следните директиви, регламенти и свързаните с тях стандарти.

cs Toto prohlášení o shodě je vydáno na výhradní odpovědnost výrobce. Tímto se potvrzuje, že produkty uvedené v tomto dokumentu splňují příslušné harmonizační předpisy Evropské unie a příslušné předpisy VB a mohou být opatřeny značkou CE a UKCA. Tyto modely splňují následující směrnice, předpisy a související normy.

da 'Denne overensstemmelseserklæring udstedes alene under fabrikantens ansvar. Dette er for at certificere, at de anførte produkter i dette dokument er i overensstemmelse med den relevante EU-harmoniseringslovgivning og den relevante britiske lovgivning og kan bære CE- og UKCA-mærket. Disse modeller er i overensstemmelse med følgende direktiver, bestemmelser og relaterede standarder.

de Diese Konformitätserklärung wurde unter der alleinigen Verantwortlichkeit des Herstellers ausgestellt. Hiermit wird bescheinigt, dass die in diesem Dokument aufgeführten Produkte mit den entsprechenden Harmonisierungsrechtsvorschriften der Union und den einschlägigen britischen Rechtsvorschriften übereinstimmen und das CE- und UKCA-Zeichen tragen dürfen. Diese Modelle erfüllen die folgenden Richtlinien, Vorschriften und zugehörigen Normen.

el Η παρούσα δήλωση συμμόρφωσης εκδίδεται με αποκλειστική ευθύνη του κατασκευαστή. Πιστοποιεί ότι τα προϊόντα που παρατίθενται στο παρόν έγγραφο συμμορφώνονται προς τη σχετική νομοθεσία εναρμόνισης της Ευρωπαϊκής Ένωσης και τη σχετική νομοθεσία του ΗΒ και δικαιούνται να φέρουν το σήμα CE και UKCA. Τα συγκεκριμένα μοντέλα συμμορφώνονται προς τις Οδηγίες, τους κανονισμούς και τα σχετικά Πρότυπα που ακολουθούν..

es Esta declaración de conformidad se emite bajo la responsabilidad exclusiva del fabricante. Esto es para certificar que los productos indicados en este documento son conformes con la legislación de armonización de la Unión pertinente y la legislación del Reino Unido pertinente, y puede portar la marca de CE y UKCA. Estos modelos cumplen con las siguientes directivas, regulaciones y normas relacionadas:

et See vastavusdeklaratsioon on välja antud tootja ainuvastutusel. Käesolevaga tõendatakse, et selles dokumendis nimetatud tooted vastavad Euroopa Liidu asjaomastele ühtlustatud õigusaktidele ja Ühendkuningriigi asjaomastele õigusaktidele ning võivad kanda CE- ja UKCA-vastavusmärgiseid. Need mudelid on kooskõlas järgmiste direktiivide, määruste ja asjaomaste standarditega.

fi Tämä vaatimustenmukaisuusvakuutus on annettu valmistajan yksinomaisella vastuulla. Vakuutamme, että tässä asiakirjassa luetellut tuotteet täyttävät niitä koskevassa Euroopan unionin yhdenmukaistamislainsäädännössä sekä Yhdistyneen kuningaskunnan lainsäädännössä asetetut vaatimukset ja voidaan varustaa CE-merkinnällä sekä UKCA-merkinnällä. Nämä mallit noudattavat seuraavien direktiivien ja asetusten sekä niitä koskevien standardien vaatimuksia:

fr Cette déclaration de conformité est établie sous la responsabilité exclusive du fabricant. Elle certifie que les produits énumérés dans le présent document sont conformes à la législation d'harmonisation pertinente de l'Union, ainsi qu'à la législation pertinente du Royaume-Uni, et que ces produits peuvent porter les marques CE et UKCA. Ces modèles sont conformes aux directives, règlementations et normes correspondantes suivantes.

hr Ova izjava o sukladnosti izdaje se pod punom odgovornošću proizvođača. Ovime se potvrđuje da su proizvodi navedeni u ovom dokumentu u skladu s važećim usklađenim propisima Unije i važećim propisima Ujedinjenog Kraljevstva te mogu nositi oznake CE i UKCA. Ovi modeli zadovoljavaju sljedeće direktive, propise i odgovarajuće standarde.

hu Ezen megfelelőségi nyilatkozat a gyártó teljes felelőssége mellett kerül kiállításra. Ez tanúsítja, hogy a dokumentumban felsorolt termékek megfelelnek a vonatkozó uniós harmonizációs jogszabályoknak és az Egyesült Királyság vonatkozó jogszabályainak, így használhatják a CE- és UKCA-jelölést. Ezek a modellek megfelelnek a következő irányelveknek, rendeleteknek és kapcsolódó szabványoknak.

it Questa dichiarazione di conformità viene emessa sotto l'esclusiva responsabilità del produttore. Con essa si certifica che i prodotti precisati nel documento sono conformi alla specifica legislazione sull'armonizzazione in vigore nell'Unione europea e alla specifica legislazione britannica e potranno riportare il marchio CE e UKCA. Questi modelli sono conformi ai seguenti regolamenti e direttive e relative norme.

lt Ši atitikties deklaracija išduota tik gamintojo atsakomybe. Šia deklaracija patvirtiname, kad joje nurodyti gaminiai atitinka jiems taikomus Europos Sąjungos darniųjų teisės aktų reikalavimus ir atitinkamus JK teisės aktus, juos leidžiama žymėti CE ir UKCA ženklais. Šie modeliai atitinka toliau nurodytų direktyvų, reglamentų ir standartų reikalavimus.

lv Par šo izdoto atbilstības deklarāciju atbild vienīgi ražotājs. Ar šo tiek apliecināts, ka dokumentā norādītie produkti atbilst attiecīgajiem Savienības harmonizācijas tiesību aktiem un attiecīgajiem AK tiesību aktiem un uz tiem var atrasties CE un UKCA zīme. Šie modeļi atbilst tālāk norādītajām direktīvām, regulām un saistītājiem standartiem.

nl 'Deze conformiteitsverklaring wordt uitgegeven onder volledige verantwoordelijkheid van de fabrikant. Dit is om te waarborgen dat de in dit document vermelde producten voldoen aan de eisen van de toepasselijke harmonisatiewetgeving van de Unie en de relevante Britse wetgeving, en de CE- en UKCA-markering mogen dragen. Deze modellen voldoen aan de volgende richtlijnen, wetgeving en bijbehorende normen.

no Denne samsvarserklæringen er utstedt med eneansvar fra produsenten. Det bekreftes herved at produktene som er oppført i dette dokumentet er i samsvar med relevant lovgivning mht. EU-harmonisering og relevant lovgivning i Storbritannia, og har rett til å bære CE- og UKCA-merket. Disse modellene tilfredsstiller følgende direktiver, forskrifter og relaterte standarder:

pl Niniejsza deklaracja zgodności została wydana na wyłączną odpowiedzialność producenta. Zaświadcza się, że produkty wymienione w niniejszym dokumencie są zgodne z odpowiednim prawodawstwem harmonizacyjnym Unii i odpowiednim prawodawstwem Wielkiej Brytanii i mogą posiadać oznaczenie CE i UKCA. Modele te spełniają wymogi następujących dyrektyw, przepisów i powiązanych norm.

pt A presente declaração de conformidade é emitida sob a exclusiva responsabilidade do fabricante. Certifica-se que os produtos indicados no presente documento estão em conformidade com a legislação de harmonização da União e a legislação relevante do Reino Unido podem exibir a marca CE e UKCA. Os presentes modelos estão em conformidade com as seguintes Diretivas, Regulamentos e Normas relacionadas.

ro Prezenta declarație de conformitate este emisă pe răspunderea exclusivă a producătorului. Prin aceasta se certifică faptul că produsele indicate în acest document sunt în conformitate cu legislația de armonizare relevantă din Uniunea Europeană și cu legislația relevantă din Regatul Unit și pot purta marcajul CE și UKCA. Aceste modele sunt conforme cu următoarele directive, regulamente și standarde asociate.

ru Данное Заявление о соответствии выдается под полную ответственность производителя. Настоящим удостоверяется, что перечисленные в этом документе изделия удовлетворяют требованиям соответствующего законодательства Европейского Союза, Великобритании и могут быть отмечены знаком CE и UKCA. Эти модели отвечают требованиям следующих директив, правил и соответствующих стандартов.

sk Toto vyhlásenie o zhode sa vydáva na výhradnú zodpovednosť výrobcu. Týmto potvrdzujeme, že výrobky uvedené v tomto dokumente vyhovujú príslušným harmonizovaným právnym predpisom Únie a príslušným právnym predpisom Veľkej Británie a môžu byť označené značkami CE a UKCA. Tieto modely sú v súlade s nasledujúcimi smernicami, nariadeniami a príslušnými normami.

sl Za izdajo te izjave o skladnosti je odgovoren izključno proizvajalec. S tem se potrjuje, da so izdelki, navedeni v tem dokumentu, v skladu z ustrezno usklajeno zakonodajo Evropske unije in ustrezno zakonodajo Združenega kraljestva ter imajo lahko oznaki CE in UKCA. Ti modeli so v skladu z naslednjimi direktivami, predpisi in povezanimi standardi.

sv Denna försäkran om överensstämmelse är utfärdad på initiativ av tillverkaren. Avsikten är att intyga att de produkter som dokumentet hänvisar till uppfyller relevant harmoniserad EU-lagstiftning och Storbritanniens lagstiftning, och kan förses med CE- och UKCA-märkning. Modellerna uppfyller följande direktiv, bestämmelser och anknytande standarder.

tr Bu uygunluk beyanı tamamen üreticinin sorumluluğu altındadır. İşbu belgede listelenen ürünlerin ilgili Birlik uyumlulaştırma mevzuatına ve ilgili İngiliz mevzuatına uygun olduğu ve CE ve UKCA işareti taşıyabileceği tasdik edilmektedir. Bu modeller aşağıdaki Direktiflere, yönetmeliklere ve ilgili Standartlara uygundur.

Part No. 100500
Revision A

en Model & Type	Serial Number	Guaranteed Sound Power Level	Measured Sound Power Level	Sound Pressure Level at Operator's Ear (1)	Engine Net Power	Speed of Rotation	Hand/Arm Vibration (2)	Mass
bg Модел и тип	Сериен номер	Гарантирано ниво на звука	Измерено ниво на звука	Налягане на звука, измерено на нивото на ухото на оператора (1)	Мощност на двигателя	Скорост на въртене	Вибрация на длана и на ръката (2)	Маса
cs Model a typ	Sériové číslo	Garantovaná hladina akustického výkonu	Změřená hladina akustického výkonu	Hladina akustického tlaku naměřená u ucha obsluhující osoby (1)	Užitečný výkon motoru	Rychlost otáčení	Vibrace rukou/paží (2)	Váha
da Model og type	Serienummer	Garanteret støjniveau	Målt støjniveau	Lydtryksniveau ved brugerens øre (1)	Maskine Netto kraft	Rotationshastighed	Vibration af hånd/arm (2)	Vægt
de Modell und Typ	Seriennummer	Garantierter Schallleistungspegel	Gemessener Schallleistung-spegel	Schalldruckpegel am Ohr der Bedienungsperson (1)	Motornettoleistung	Rotations-drehzahl	Vibrationen an Hand/Arm (2)	Masse
el Μοντέλο & Τύπος	Σειριακός Αριθμός	Εγγυημένη στάθμη ηχητικής ισχύος	Μετρηθείσα στάθμη ηχητικής ισχύος	Στάθμη ηχητικής πίεσης στο αυτί του χειριστή (1)	Καθαρή ισχύς κινητήρα	Ταχύτητα περιστροφής	Χειροβραχιονική δόνηση (2)	Μάζα
es Modelo y tipo	Número de serie	Nivel garantizado de potencia acústica	Nivel medido de potencia acústica	Nivel de presión acústica en el oído del operador (1)	Potencia neta del motor	Velocidad de rotación	Vibración mano / brazo (2)	Masa
et Mudel ja tüüp	Seerianumber	Garanteeritud helivõimsuse tase	Mõõdetud helivõimsuse tase	Helirõhu tase kasutaja kõrva juures (1)	Masin puhas tõõtav	Pöörlemiskiirus	Võkumine käsi / käsivars (2)	Massi
fi Malli ja tyyppi	Sarjanumero	Taattu äänitehotaso	Mitattu äänitehotaso	Äänenpaine taso käyttäjän korvan tasolla (1)	Moottorin nettoteho	Pyörimis-nopeus	Käden/käsivarren tärinä (2)	Paino
fr Modèle et type	Numéro de série	Niveau de bruit garanti	Niveau de bruit mesuré	Niveau sonore au niveau de l'oreille de l'opérateur (1)	Puissance nette du moteur	Vitesse de rotation	Vibrations au niveau de la main/du bras (2)	Masse
hr Model i vrsta	Serijski broj	Zajamčena razina snage zvuka	Izmjerena razina snage zvuka	Razina zvučnog tlaka na uhu rukovatelja (1)	Neto snaga motora	Brzina vrtnje	Vibracije šake/ruke (2)	Masa
hu Modell és típus	Sorozatszám	Garantált hangteljesítmény szint	Mért hangteljesítmény szint	Hangnyomás szint a gépkezelő fülénél (1)	Motor hasznos teljesítménye	Fordulatszám	Kéz/kar vibráció (2)	Tömeg
it Modello e tipo	Numero di serie	Livello acustico garantito	Livello acustico misurato	Livello di pressione acustica all'orecchio dell'operatore (1)	Potenza netta motore	Velocità di rotazione	Vibrazioni a mani/braccia (2)	Massa
lt Modelis ir tipas	Serijos numeris	Garantuotas triukšmo lygis	Pamatuotas triukšmo lygis	Garso spaudimo lygis įrangos naudotojui (1)	Variklio bendras galingumas	Apsisukimo greitis	Rankenos vibracija (2)	Masė
lv Modelis un tips	Sērijas numurs	Garantētais skaņas jaudas līmenis	Izmērītais skaņas jaudas līmenis	Skaņas spiediena līmenis pie operatora auss (1)	Dzinēja neto jauda	Rotēšanas ātrums	Rokas/pleca vibrācija (2)	Masa
nl Model en type	Serienummer	Gegarandeerd geluidsdrukniveau	Gemeten geluidsdrukniveau	Geluidsdrukniveau bij het oor van de gebruiker (1)	Netto motorvermogen	Rotatie-snelheid	Trilling van hand/arm (2)	Mass
no Modell og type	Serienummer	Garantert lydstyrkenivå	Målt lydstyrkenivå	Lydtrykk-nivå ved operatørens øre (1)	Motorens netto krefter	Rotasjons-hastighet	Hånd/ arm-vibrasjon (2)	Masse
pl Model i typ	Numer seryjny	Gwarantowany poziom mocy akustycznej	Zmierzony poziom mocy akustycznej	Poziom ciśnienia akustycznego w uchu operatora (1)	Moc netto silnika	Prędkość obrotowa	Drgania rękiramienia (2)	Masa
pt Modelo e Tipo	Número de série	Nível de potência de som garantido	Nível de potência de som medido	Níveis de pressão do som no ouvido do operador (1)	Potência útil do motor	Velocidade de Rotação	Vibração na mão/braço (2)	Massa
ro Model și tip	Număr de serie	Nivel de zgomot garantat	Nivel de zgomot măsurat	Nivel de presiune acustică la urechea operatorului (1)	Putere netă motor	Viteza de rotire	Vibrație mână/braț (2)	Masă
ru Модель и тип	Серийный номер	Гарантированный уровень звуковой мощности	Измеренный уровень звуковой мощности	Уровень звукового давления на месте оператора (1)	Полезная мощность двигателя	Частота вращения	Интенсивность вибрации на ладонях/руках (2)	Вес
sk Model a typ	Sériové číslo	Zaručená hladina akustického výkonu	Nameraná hladina akustického výkonu	Hladina akustického tlaku pôsobiaceho na ucho obsluhy (1)	čisty výkon motora	Počet otáčok	Ruka/Rameno Vibrácia (2)	Masa
sl Model in tip	Serijska številka	Zajamčena raven zvočne moči	Izmerjena raven zvočne moči	Raven zvočnega tlaka pri ušesu uporabnika (1)	Izhodna moč motorja	Hitrost vrtenja	Tresljaji na rokah (2)	Masa
sv Modell och typ	Serienummer	Garanterad ljudeffektnivå	Uppmätt ljudeffektnivå	Ljudtrycksnivå vid operatörens öra (1)	Motoreffekt netto	Rotations-hastighet	Hand-/ armvibrationer (2)	Massa
tr Model ve Tip	Seri Numarası	Garantili Ses Gücü Seviyesi	Ölçülen Ses Gücü Seviyesi	Operatörün Kulağındaki Ses Basınç Seviyesi (1)	Makine Net Gücü	Makine Net Gücü	El/Kol Titreşimi (2)	Ağırlık
AE401H	123021001	101 dB(A)	99 dB(A)	82 dB(A) (K= 2,0)	2.98 kW	3900 MIN^{-1}	6.52 m/s^2	110 kg
AE403V	123021001	102 dB(A)	100 dB(A)	88 dB(A) (K= 2,0)	3,5 kW	3600 MIN^{-1}	2,73 m/s^2	109 kg
PL1801H	123021001	105 dB(A)	103 dB(A)	90 dB(A) (K= 2,0)	2.61 kW	3600 MIN^{-1}	7.43 m/s^2	109 kg
PL1803V PL1803VB PL1803VR	123021001	105 dB(A)	103 dB(A)	89 dB(A) (K= 2,0)	3,50 kW	3600 MIN^{-1}	5,79 m/s^2	107 kg
PL2501SPH	123021001	107 dB(A)	105 dB(A)	93 dB(A) (K= 2,0)	3.60 kW	3650 MIN^{-1}	10.49 m/s^2	197 kg
PL2501SPV	123021001	109 dB(A)	107 dB(A)	93 dB(A) (K= 2,0)	4.84 kW	3650 MIN^{-1}	8.78 m/s^2	197 kg
AE1300HEU	123021001	106 dB(A)	104 dB(A)	91 dB(A) (K= 2,0)	9.70 kW	3750 MIN^{-1}	8,31 m/s^2	237 kg

(1) ISO 5395-1:2013 F.7 (EN 4871:1996)
(2) ISO 5395-1:2013 G.8 (EN 12096:1997, D.1)

en	Directive / Regulations:	2006/42/EC & S.I. 2008/1597; 2000/14/EC ANNEX V (ISO 3744:1995, ISO 11094:1991) & S.I. 2001/1701 Schedule 8; 2016/1628; 2014/30/EU & S.I. 2016/1091
bg	Директива/регламент:	2006/42/ЕС и S.I. 2008/1597; 2000/14/ЕС Приложение V (ISO 3744:1995, ISO 11094:1991) и S.I. 2001/1701 Schedule 8; 2016/1628; 2014/30/EU и S.I. 2016/1091
cs	Směrnice/předpisy:	2006/42/EC a S.I. 2008/1597; 2000/14/EC Příloha V směrnice (ISO 3744:1995, ISO 11094:1991) a S.I. 2001/1701 Schedule 8; 2016/1628; 2014/30/EU a S.I. 2016/1091
da	Direktiv/forordninger:	2006/42/EF og S.I. 2008/1597; 2000/14/EF ANNEX V (ISO 3744:1995, ISO 11094:1991) og S.I. 2001/1701 Schedule 8; 2016/1628; 2014/30/EU og S.I. 2016/1091
de	Richtlinie/Bestimmungen:	2006/42/EG und S.I. 2008/1597; 2000/14/EG ANNEX V (ISO 3744:1995, ISO 11094:1991) und S.I. 2001/1701 Schedule 8; 2016/1628; 2014/30/EU und S.I. 2016/1091
el	Οδηγία / Κανονισμοί:	2006/42/ΕΚ & S.I. 2008/1597; 2000/14/ΕΚ ΠΑΡΑΡΤΗΜΑ V (ISO 3744:1995, ISO 11094:1991) & S.I. 2001/1701 Schedule 8; 2016/1628; 2014/30/EU & S.I. 2016/1091
es	Directiva/regulaciones:	2006/42/EC y S.I. 2008/1597; 2000/14/EC ANNEX V (ISO 3744:1995, ISO 11094:1991) y S.I. 2001/1701 Schedule 8; 2016/1628; 2014/30/EU y S.I. 2016/1091
et	Direktiiv/määrused:	2006/42/EÜ ja S.I. 2008/1597; 2000/14/EÜ ANNEX V (ISO 3744:1995, ISO 11094:1991) ja S.I. 2001/1701 Schedule 8; 2016/1628; 2014/30/EU ja S.I. 2016/1091
fi	Direktiivi/asetukset:	2006/42/EC & S.I. 2008/1597; 2000/14/EC ANNEX V (ISO 3744:1995, ISO 11094:1991) & S.I. 2001/1701 Schedule 8; 2016/1628; 2014/30/EU & S.I. 2016/1091
fr	Directive/Règlementations:	2006/42/CE et S.I. 2008/1597; 2000/14/CE ANNEX V (ISO 3744:1995, ISO 11094:1991) et S.I. 2001/1701 Schedule 8; 2016/1628; 2014/30/EU et S.I. 2016/1091
hr	Direktive / propisi:	2006/42/EC & S.I. 2008/1597; 2000/14/EC DODATAK V (ISO 3744:1995, ISO 11094:1991) & S.I. 2001/1701 Schedule 8; 2016/1628; 2014/30/EU & S.I. 2016/1091
hu	Irányelv / rendeletek:	2006/42/EU & S.I. 2008/1597; 2000/14/EU V. MELLÉKLET (ISO 3744:1995, ISO 11094:1991) & S.I. 2001/1701 Schedule 8; 2016/1628; 2014/30/EU & S.I. 2016/1091
it	Direttiva/Regolamento:	2006/42/CE e S.I. 2008/1597; 2000/14/CE ALLEGATO V (ISO 3744:1995, ISO 11094:1991) e S.I. 2001/1701 Schedule 8; 2016/1628; 2014/30/EU e S.I. 2016/1091
lt	Direktyva / reglamentai:	2006/42/EC ir S.I. 2008/1597; 2000/14/EC ANNEX V (ISO 3744:1995, ISO 11094:1991) ir S.I. 2001/1701 Schedule 8; 2016/1628; 2014/30/EU ir S.I. 2016/1091
lv	Direktīva / Regulas:	2006/42/EK un S.I. 2008/1597; 2000/14/EK PIELIKUMS V (ISO 3744:1995, ISO 11094:1991) un S.I. 2001/1701 Schedule 8; 2016/1628; 2014/30/EU un S.I. 2016/1091
nl	Richtlijn/wetgeving:	2006/42/EC en S.I. 2008/1597; 2000/14/EC ANNEX V (ISO 3744:1995, ISO 11094:1991) en S.I. 2001/1701 Schedule 8; 2016/1628; 2014/30/EU en S.I. 2016/1091
no	Direktiv/forskrifter:	2000/14/EC & S.I. 2008/1597; 2000/14/EC ANNEX V (ISO 3744:1995, ISO 11094:1991) & S.I. 2001/1701 Schedule 8; 2016/1628; 2014/30/EU & S.I. 2016/1091
pl	Dyrektywa/Przepisy:	2006/42/WE i S.I. 2008/1597; 2000/14/WE ZAŁĄCZNIK V (ISO 3744:1995, ISO 11094:1991) i S.I. 2001/1701 Schedule 8; 2016/1628; 2014/30/EU i S.I. 2016/1091
pt	Diretiva/Regulamentos:	2006/42/EC e S.I. 2008/1597; 2000/14/EC ANNEX V (ISO 3744:1995, ISO 11094:1991) e S.I. 2001/1701 Schedule 8; 2016/1628; 2014/30/EU e S.I. 2016/1091
ro	Directivă/Regulamente:	2006/42/EC ŞI S.I. 2008/1597; 2000/14/EC ANNEX V (ISO 3744:1995, ISO 11094:1991) ŞI S.I. 2001/1701 Schedule 8; 2016/1628; 2014/30/EU ŞI S.I. 2016/1091
ru	Директивы / Правила:	2006/42/ЕС & S.I. 2008/1597; 2000/14/ЕС Приложение V (ISO 3744:1995, ISO 11094:1991) & S.I. 2001/1701 Schedule 8; 2016/1628; 2014/30/EU & S.I. 2016/1091
sk	Smernica/nariadenia:	2006/42/EC a S.I. 2008/1597; 2000/14/EC ANNEX V (ISO 3744:1995, ISO 11094:1991) a S.I. 2001/1701 Schedule 8; 2016/1628; 2014/30/EU a S.I. 2016/1091
sl	Direktiva/predpisi:	2006/42/ES & S.I. 2008/1597; 2000/14/ES ANEKS V (ISO 3744:1995, ISO 11094:1991) & S.I. 2001/1701 Schedule 8; 2016/1628; 2014/30/EU & S.I. 2016/1091
sv	Direktiv/bestämmelser:	2006/42/EC & S.I. 2008/1597; 2000/14/EC ANNEX V (ISO 3744:1995, ISO 11094:1991) & S.I. 2001/1701 Schedule 8; 2016/1628; 2014/30/EU & S.I. 2016/1091
tr	Direktif/Yönetmelikler:	2006/42/EC & S.I. 2008/1597; 2000/14/EC EK V (ISO 3744:1995, ISO 11094:1991) & S.I. 2001/1701 Schedule 8; 2016/1628; 2014/30/EU & S.I. 2016/1091

en *Place of Declaration & Full Address of the Manufacturer /* Person Authorised to Compile the Technical File
bg Място на деклариране и пълен адрес на производителя / лицето, упълномощено да състави техническото досие
cs Místo prohlášení a plná adresa výrobce / osoby oprávněné k sestavení technických informací
da Erklæringssted og fuldstændig adresse på fabrikanten / den person, der er bemyndiget til at udarbejde det tekniske dokument
de Ort der Erklärung und vollständige Anschrift des Herstellers / der zur Zusammenstellung der technischen Unterlagen befugten Person
el Τόπος Δήλωσης & Πλήρης Διεύθυνση του Κατασκευαστή / Πρόσωπο Εξουσιοδοτημένο για τη Σύνταξη του Τεχνικού Φακέλου
es Lugar de la declaración y dirección completa del fabricante / persona autorizada para compilar el expediente técnico
et Deklaratsiooni koostamise koht ja tootja täielik aadress / isiku nimi, kellel on õigus koostada tehnilist toimikut
fi Vakuutuksen paikka ja valmistajan / Teknisen tiedoston laatimiseen valtuutetun henkilön täydellinen osoite
fr *Lieu de la déclaration et adresse complète du fabricant /* de la personne autorisée à établir le fichier technique
hr Mjesto sastavljanja izjave i puna adresa proizvođača / osoba ovlaštena za sastavljanje tehničkog spisa
hu A gyártó / a műszaki dokumentáció összeállítására jogosult személy nyilatkozattételének helye és teljes címe
it Luogo della dichiarazione e indirizzo completo del produttore / soggetto autorizzato a compilare il fascicolo tecnico
lt Gamintojo / asmens, įgalioto parengti techninę bylą, deklaravimo vieta ir tikslus adresas
lv Deklarācijas vieta un ražotāja / personas, kas pilnvarota sastādīt tehnisko lietu, pilna adrese
nl Plaats van aangifte en volledig adres van de fabrikant / persoon die bevoegd is om het technische dossier samen te stellen
no Sted for erklæring og full adresse for produsenten / Person autorisert til å sette sammen den tekniske filen
pl Miejsce zgłoszenia i pełny adres producenta/osoby upoważnionej do sporządzania dokumentacji technicznej
pt Local da declaração e morada completa do fabricante / pessoa autorizada a compilar o ficheiro técnico
ro Locul declarării și adresa completă a producătorului / a persoanei autorizate să întocmească dosarul tehnic
ru Место декларации и полный адрес производителя / лица, уполномоченного на составление технического файла
sk Miesto vyhlásenia a úplná adresa výrobcu/osoby oprávnenej *zostaviť technický súbor*
sl Kraj izjave in polni naslov proizvajalca/pooblaščene osebe za urejanje tehnične datoteke
sv Plats för försäkran och fullständig adress till tillverkaren / person med behörighet att sammanställa den tekniska filen
tr Teknik Dosyayı Derleme Yetkisine Haiz Üreticinin / Kişinin Beyan Yeri ve Tam Adresi

Briggs & Stratton LLC
1803 SW Jefferson St.
Lee's Summit, MO 64063 USA

Jeroen Engelen
Schepersweg 4a
6049CV Herten, NL

en Person empowered to draw up the declaration on behalf of the manufacturer
bg Лице, упълномощено да изготви декларацията от името на производителя
cs Osoba oprávněná vydat prohlášení jménem výrobce
da Person, der er bemyndiget til at udfærdige erklæringen på fabrikantens vegne
de Person, die befugt ist, die Erklärung im Namen des Herstellers auszustellen
el Πρόσωπο εξουσιοδοτημένο να συντάξει τη δήλωση για λογαριασμό του κατασκευαστή
es Persona autorizada para redactar la declaración en nombre del fabricante
et Isik, kes on volitatud tootja nimel deklaratsiooni koostama
fi Vakuutuksen laatimiseen valmistajan puolesta valtuutettu henkilö
fr Personne habilitée à rédiger la déclaration au nom du fabricant
hr *Osoba ovlaštena za sastavljanje izjave u* ime proizvođača
hu A gyártó nevében a nyilatkozattételre jogosult személy
it Soggetto autorizzato a redigere la dichiarazione a nome e per conto del produttore
lt Asmuo, kuriam suteikti įgaliojimai parengti deklaraciją gamintojo vardu
lv Persona, kas pilnvarota ražotāja vārdā sagatavot deklarāciju
nl Bevoegde persoon om namens de fabrikant de verklaring op te stellen
no Person bemyndiget til å utarbeide erklæringen på vegne av produsenten
pl Osoba upoważniona do sporządzania deklaracji w imieniu producenta
pt Pessoa com capacidade para elaborar a declaração em nome do fabricante
ro Persoana autorizată să elaboreze declarația în numele producătorului
ru Лицо, уполномоченное на оформление декларации от имени производителя
sk Osoba splnomocnená vypracovať vyhlásenie v mene výrobcu
sl Pooblaščena oseba za pripravo izjave v imenu proizvajalca
sv Person med behörighet att utarbeta försäkran för *tillverkarens räkning*
tr Üretici adına beyanı kaleme almakla yetkilendirilmiş kişi

Rick McGee
Engineering Manager
12/30/2021